PHHQP XI:
Non-Hermitian Operators in Quantum Physics
APC, Paris Diderot University, Paris
August 27 - 31, 2012

Three $\mathcal{PT}$ symmetry topics

Uwe Guenther

Helmholtz Center Dresden-Rossendorf, Dresden, Germany

- I. Naimark-dilated unambiguous $\mathcal{PT}$-symmetric quantum state discrimination

  with Carl M. Bender, Dorje C. Brody and Boris F. Samsonov

- II. Nonlinear $\mathcal{PT}$-symmetric plaquettes

  with Kai Li, Panayotis G. Kevrekidis and Boris A. Malomed

- III. Tachistochrones in $\mathcal{PT}-$symmetric LRC circuits

  with Hamid Ramezani, Joseph Schindler, Fred M. Ellis, Tsampikos Kottos

I. Naimark-dilated unambiguous $\mathcal{PT}$-symmetric quantum state discrimination

State discrimination

- textbook knowledge in quantum computation

- first investigations:

  – I.D. Ivanovic, "How to discriminate between non-orthogonal states", PLA 123 (1987) 257-259.
  – D. Dieks, "Overlap and distinguishability of quantum states", PLA 126 (1988) 303-306.
  – A. Peres, "How to differentiate between non-orthogonal states", PLA 128 (1988) 19.
  – G. Jaeger and A. Shimony, "Optimal distinction between two non-orthogonal quantum states", PLA 197 (1995) 83-87.

- given two non-orthogonal states: $|p\rangle, |q\rangle \in \mathcal{H} \cong \mathbb{C}^2$

$$\langle p|q\rangle = \cos(\varepsilon) \neq 0$$

- probabilistic analysis
- system prepared 50% in $|p\rangle$ and 50% in $|q\rangle$
- question: In which state is the system?

- answer via Hilbert space extension trick $\mathcal{H} \hookrightarrow \mathcal{H}_a \times \mathcal{H}$:
- composite system with ancilla state $|s_0\rangle \in \mathcal{H}_a \cong \mathbb{C}^2$
- embedding + interaction (unitary rotation):

$$\begin{aligned} |s_0\, p\rangle &\longrightarrow \alpha|s_1\, p_1\rangle + \beta|s_2\, p_2\rangle \\ |s_0\, q\rangle &\longrightarrow \gamma|s_1\, q_1\rangle + \delta|s_2\, q_2\rangle \end{aligned}$$

  orthogonality conditions: $\langle p_1|q_1\rangle = 0, \qquad \langle s_1|s_2\rangle = 0$

- $|s_1\rangle$ — successful measurement (discrimination with certainty)
- $|s_2\rangle$ — discrimination is impossible
- optimal state discrimination: $|p_2\rangle = e^{i\alpha}|q_2\rangle$
- maximal probability of successful discrimination: $1 - |\langle p|q\rangle|$

Modified state discrimination and $\mathcal{PT}$ brachistochrone

- given 2 entangled states in $\mathbb{C}^4$

$$|\mathbf{\Phi}_1\rangle = \frac{|e_+\rangle \otimes |\psi_1\rangle + |e_-\rangle \otimes |\chi\rangle}{\sqrt{1+b^2}} = \frac{1}{\sqrt{1+b^2}} \begin{pmatrix} |\psi_1\rangle \\ |\chi\rangle \end{pmatrix}$$

$$|\mathbf{\Phi}_2\rangle = \frac{|e_+\rangle \otimes |\psi_2\rangle + |e_-\rangle \otimes |\chi\rangle}{\sqrt{1+b^2}} = \frac{1}{\sqrt{1+b^2}} \begin{pmatrix} |\psi_2\rangle \\ |\chi\rangle \end{pmatrix}$$

- in general $\langle\psi_1|\psi_2\rangle \neq 0$
- $|\chi\rangle$ additive ancilla
- problem: discrimination of $|\psi_1\rangle$, $|\psi_2\rangle$ in projection subspace $\mathbb{C}^2$
- related to discrimination problem in $\mathbb{C}^4$
- crucial: $-1 \leq \langle\psi_1|\psi_2\rangle \leq 0$
- coincidence limit $\langle\psi_1|\psi_2\rangle = -1 \quad \longrightarrow \quad \langle\mathbf{\Phi}_1|\mathbf{\Phi}_2\rangle \neq 1$

- quantum state discrimination via Naimark dilated $\mathcal{PT}-$brachistochrone:

$$|\mathbf{\Phi}(t)\rangle = \mathbf{U}(t)|\mathbf{\Phi}(0)\rangle = e^{-i\mathbf{H}t}\begin{pmatrix} |\psi(0)\rangle \\ |\chi(0)\rangle \end{pmatrix} = \begin{pmatrix} |\psi(t)\rangle \\ |\chi(t)\rangle \end{pmatrix}$$

exactly reproduces the nonunitary evolution in $\mathbb{C}^2$:

$$e^{-i\mathbf{H}t}\begin{pmatrix} |\psi(0)\rangle \\ |\chi(0)\rangle \end{pmatrix} = \begin{pmatrix} e^{-iHt}|\psi(0)\rangle \\ |\chi(t)\rangle \end{pmatrix}$$

- unambiguous state discrimination when $\langle\psi_1(t)|\psi_2(t)\rangle = 0$

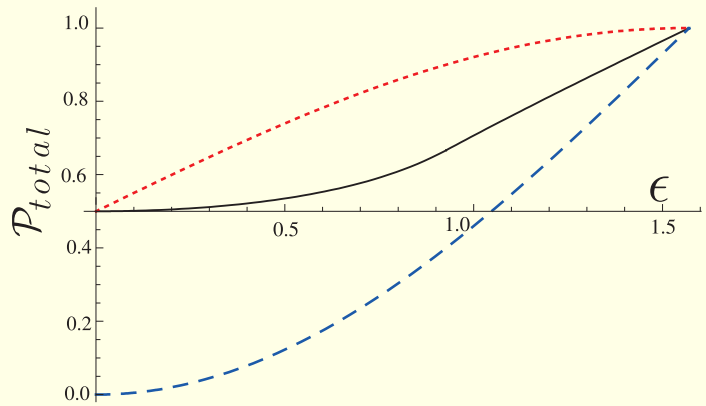

total success probability to discriminate $|\langle\psi_1|\psi_2\rangle| = \cos(\varepsilon)$

- red — Helstrom bound from a minimal-error scheme
- blue — bound from multiplicative ancilla scheme (standard unambiguous quantum state discrimination scheme)
- black — additive ancilla scheme (present technique)
  $=$ Naimark-dilated unambiguous $\mathcal{PT}$-symmetric quantum state discrimination

II. Nonlinear $\mathcal{PT}$-symmetric plaquettes

J. Phys. A: Math. Theor. (2012), to appear; arXiv:1204.5530

Setup

coupled waveguides arranged as 2D plaquettes (oligomers)

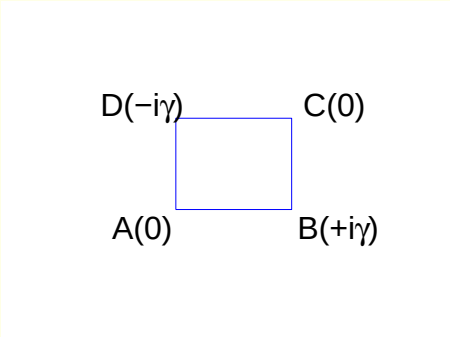

(a) mode 0+0-

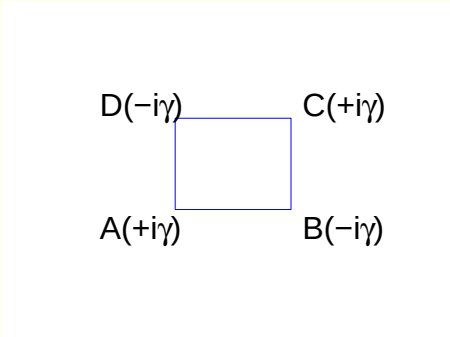

(b) mode +-+-

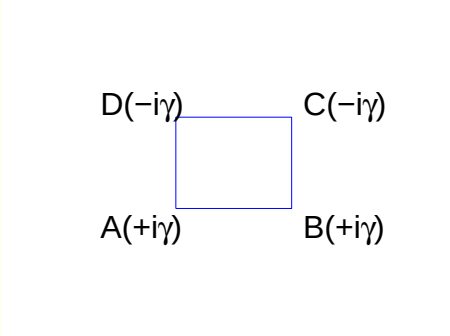

(c) mode ++- -

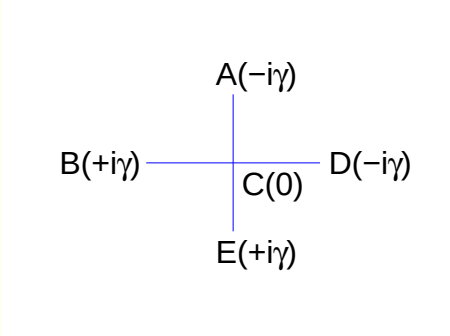

(d) mode +-0+-

- typical equation system (plaquette (a))

$$
\begin{aligned}
i\dot{u}_A &= -k(u_B + u_D) - |u_A|^2 u_A \\
i\dot{u}_B &= -k(u_A + u_C) - |u_B|^2 u_B + i\gamma u_B \\
i\dot{u}_C &= -k(u_B + u_D) - |u_C|^2 u_C \\
i\dot{u}_D &= -k(u_A + u_C) - |u_D|^2 u_D - i\gamma u_D
\end{aligned}
$$

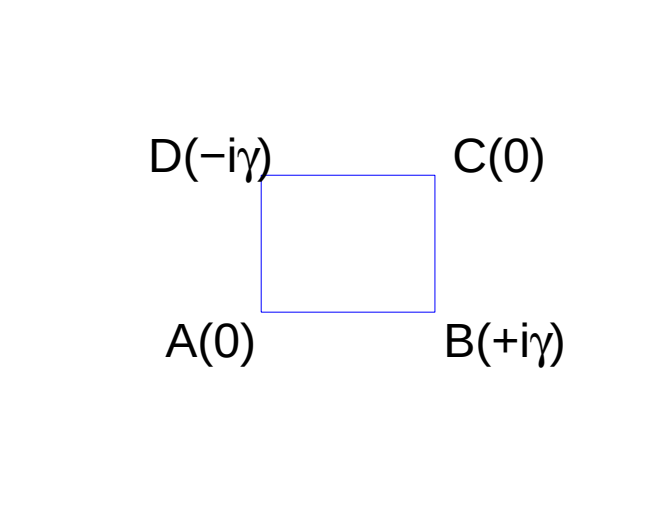

- general setup $\qquad i\dot{\mathbf{u}} = H_L\mathbf{u} + H_{NL}(\mathbf{u})\mathbf{u}$
- assumption: $\qquad H_L = H_L^T, \qquad H_{NL}(\mathbf{u}) = H_{NL}^T(\mathbf{u})$
- symmetries of H_L and $H_{NL}(\mathbf{u})$
- time reversal $\mathbf{T}$: $\mathcal{T} \cup \ t \to -t, \quad \mathcal{T}^2 = I, \quad \mathbf{T}^2 = I$

$$\begin{aligned} \mathbf{u}(t) &= \sum_{n=1}^{N} e^{-iE_n t}\mathbf{u}_n \\ H_L\mathbf{u}_n &= E_n\mathbf{u}_n \end{aligned}$$

$$\begin{aligned} \mathbf{T}(i\partial_t\mathbf{u}) &= \mathbf{T}(H_L\mathbf{u}) \\ i\partial_t\mathbf{T}(\mathbf{u}) &= \bar{H}_L\mathbf{T}(\mathbf{u}) \\ \mathbf{T}\mathbf{u}(t) &= \mathcal{T}\mathbf{u}(t)|_{t\to -t} = \sum_{n=1}^{N} e^{-i\bar{E}_n t}\bar{\mathbf{u}}_n \end{aligned}$$

- parity operator: $\mathcal{P}$, $\mathcal{P}^2 = I$, $[\mathbf{T}, \mathcal{P}] = 0$, $\mathcal{P} \in \mathbb{R}^{N \times N}$
- $\mathcal{PT}$ symmetry: $[\mathcal{PT}, H_L] = 0 \ \cup \ H_L = H_L^T \quad \Longrightarrow \quad \mathcal{P} H_L \mathcal{P} = H_L^\dagger$
- task 1: find $\mathcal{P}$ for plaquettes via $[\mathcal{PT}, H_L] = 0$
- task 2: check $\mathcal{P}\mathbf{T}-$symmetry of $i\dot{\mathbf{u}} = H_L \mathbf{u} + H_{NL}(\mathbf{u})\mathbf{u}$

- explicitly for plaquette (a)

$$
\begin{aligned}
H_L &= \begin{pmatrix} 0 & -k & 0 & -k \\ -k & i\gamma & -k & 0 \\ 0 & -k & 0 & -k \\ -k & 0 & -k & -i\gamma \end{pmatrix} = H_L^T \\
&= -k(I+\sigma_x)\otimes\sigma_x + i\frac{\gamma}{2}\sigma_z\otimes(I-\sigma_z)
\end{aligned}
$$

$$
H_{NL}(\mathbf{u}) = -\begin{pmatrix} |u_A|^2 & 0 & 0 & 0 \\ 0 & |u_B|^2 & 0 & 0 \\ 0 & 0 & |u_C|^2 & 0 \\ 0 & 0 & 0 & |u_D|^2 \end{pmatrix} = H_{NL}^T(\mathbf{u}) = H_{NL}^\dagger(\mathbf{u})
$$

- pseudo-Hermiticity $\mathcal{P} H_L \mathcal{P} = H_L^\dagger$

$$\begin{aligned} H_L &= H_{L,0} + H_{L,1} \\ H_{L,0} &= -k(I + \sigma_x) \otimes \sigma_x = H_{L,0}^\dagger \\ H_{L,1} &= i\frac{\gamma}{2}\sigma_z \otimes (I - \sigma_z) = -H_{L,1}^\dagger \end{aligned}$$

trivial implications:

$$\begin{aligned} \mathcal{P} H_{L,0} \mathcal{P} = H_{L,0} \qquad &\Longrightarrow \qquad [\mathcal{P}, H_{L,0}] = 0 \\ \mathcal{P} H_{L,1} \mathcal{P} = -H_{L,1} \qquad &\Longrightarrow \qquad \{\mathcal{P}, H_{L,1}\} = 0 \end{aligned}$$

- solutions of $[\mathcal{P}, H_{L,0}] = 0 \ \cup \ \mathcal{P}^2 = I \ \cup \ \mathcal{P} \neq I$

$$\mathcal{P}_{0x} := I \otimes \sigma_x \,, \qquad \mathcal{P}_{x0} := \sigma_x \otimes I \,, \qquad \mathcal{P}_{xx} := \sigma_x \otimes \sigma_x$$

- restriction $\{\mathcal{P}, H_{L,1}\} = 0 \qquad \Longrightarrow \qquad \mathcal{P}_{x0}$

$$\mathcal{P} = \mathcal{P}_{x0} \quad = \quad \begin{pmatrix} 0 & I \\ I & 0 \end{pmatrix} = \begin{pmatrix} 0 & 0 & 1 & 0 \\ 0 & 0 & 0 & 1 \\ 1 & 0 & 0 & 0 \\ 0 & 1 & 0 & 0 \end{pmatrix}$$

$$\mathcal{P}_{x0}: \qquad A \rightleftarrows C \;\cup\; B \rightleftarrows D \qquad 2D - \text{rotation} \quad \pm\pi$$

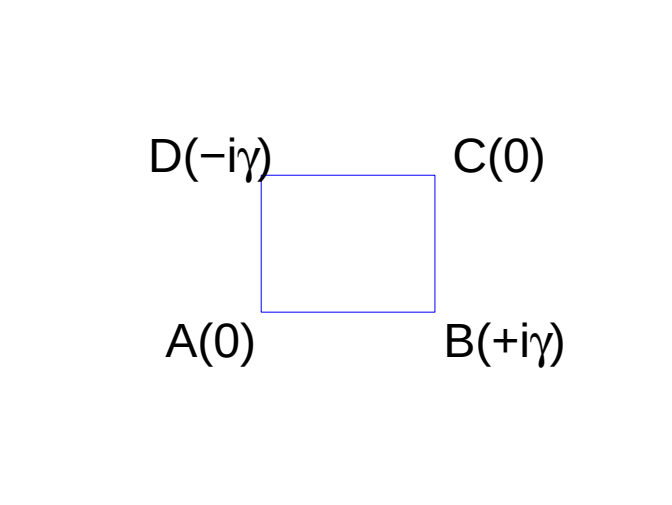

- nonlinear term

$$H_{NL}(\mathcal{P}\mathbf{u}) = \mathcal{P}H_{NL}(\mathbf{u})\mathcal{P} = -\begin{pmatrix} |u_C|^2 & 0 & 0 & 0 \\ 0 & |u_D|^2 & 0 & 0 \\ 0 & 0 & |u_A|^2 & 0 \\ 0 & 0 & 0 & |u_B|^2 \end{pmatrix} \neq H^\dagger_{NL}(\mathbf{u})$$

not $\mathcal{P}-$pseudo-Hermitian: $\mathcal{P}H_{NL}(\mathbf{u})\mathcal{P} \neq H^\dagger_{NL}(\mathbf{u})$

- only here trivial $H_{NL}(\mathcal{P}\mathbf{u}) = \mathcal{P}H_{NL}(\mathbf{u})\mathcal{P}$
- in general: $H_{NL}(\mathbf{u})$ multi-sesquilinear object
- best visible in components

$$\begin{aligned} \mathbf{u} \quad &\longrightarrow \quad u_k \\ H_{NL}(\mathbf{u})\mathbf{u} \quad &\longrightarrow \quad [H_{NL}]^{ijk}_m \; \bar{u}_i u_j u_k \end{aligned}$$

- $\mathcal{PT}-$symmetry in the following sense:

$$\mathcal{PT}(i\partial_t \mathbf{u}) = \mathcal{PT}\left[H_L \mathbf{u} + H_{NL}(\mathbf{u})\mathbf{u}\right]$$

$$i\partial_t(\mathcal{PT}\mathbf{u}) = H_L \mathcal{PT}\mathbf{u} + H_{NL}(\mathcal{PT}\mathbf{u})(\mathcal{PT}\mathbf{u})$$

- exact $\mathcal{PT}-$symmetry

$$\begin{aligned} \mathcal{PT}\mathbf{u} &= e^{i\phi}\mathbf{u}, \qquad \phi \in \mathbb{R} \\ \mathcal{P}\bar{\mathbf{u}}(-t) &= e^{i\phi}\mathbf{u}(t) \\ H_{NL}(\mathcal{PT}\mathbf{u}) &= H_{NL}(\mathbf{u}) \end{aligned}$$

- completely broken $\mathcal{PT}-$symmetry:

$$\mathcal{PT}\mathbf{u} \neq e^{i\phi}\mathbf{u} \qquad \Longrightarrow \qquad H_{NL}(\mathcal{PT}\mathbf{u}) \neq H_{NL}(\mathbf{u})$$

- plaquette (b)

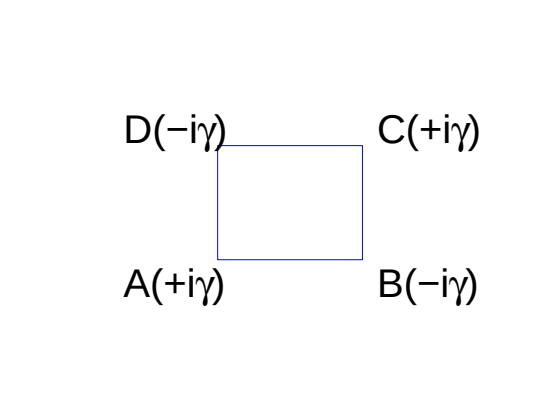

$$H_{L,1} = \begin{pmatrix} i\gamma & 0 & 0 & 0 \\ 0 & -i\gamma & 0 & 0 \\ 0 & 0 & i\gamma & 0 \\ 0 & 0 & 0 & -i\gamma \end{pmatrix} = i\gamma I \otimes \sigma_z$$

$$\mathcal{P}_{0x} = \begin{pmatrix} \sigma_x & 0 \\ 0 & \sigma_x \end{pmatrix}, \qquad \mathcal{P}_{xx} = \begin{pmatrix} 0 & \sigma_x \\ \sigma_x & 0 \end{pmatrix}$$

- plaquette (c)

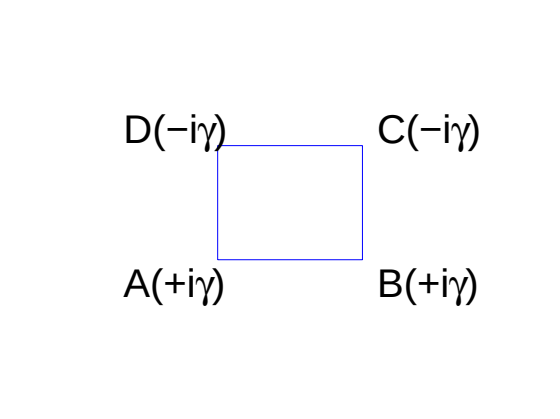

$$H_{L,1} = \begin{pmatrix} i\gamma & 0 & 0 & 0 \\ 0 & i\gamma & 0 & 0 \\ 0 & 0 & -i\gamma & 0 \\ 0 & 0 & 0 & -i\gamma \end{pmatrix} = i\gamma\sigma_z \otimes I$$

$$\mathcal{P}_{x0} = \begin{pmatrix} 0 & I \\ I & 0 \end{pmatrix}, \qquad \mathcal{P}_{xx} = \begin{pmatrix} 0 & \sigma_x \\ \sigma_x & 0 \end{pmatrix}$$

- plaquette (d)

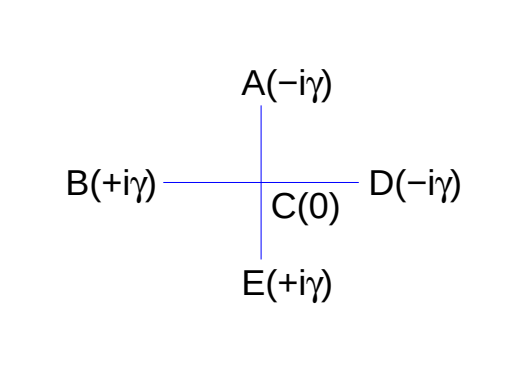

$$H_{L,0} = \begin{pmatrix} 0 & 0 & -k & 0 & 0 \\ 0 & 0 & -k & 0 & 0 \\ -k & -k & 0 & -k & -k \\ 0 & 0 & -k & 0 & 0 \\ 0 & 0 & -k & 0 & 0 \end{pmatrix}, \qquad H_{L,1} = \begin{pmatrix} -i\gamma & 0 & 0 & 0 & 0 \\ 0 & i\gamma & 0 & 0 & 0 \\ 0 & 0 & 0 & 0 & 0 \\ 0 & 0 & 0 & -i\gamma & 0 \\ 0 & 0 & 0 & 0 & i\gamma \end{pmatrix}$$

$$\mathcal{P}_{d,0} = \begin{pmatrix} 0 & 1 & 0 & 0 & 0 \\ 1 & 0 & 0 & 0 & 0 \\ 0 & 0 & 1 & 0 & 0 \\ 0 & 0 & 0 & 0 & 1 \\ 0 & 0 & 0 & 1 & 0 \end{pmatrix}, \quad \mathcal{P}_{d,x} = \begin{pmatrix} 0 & 0 & 0 & 0 & 1 \\ 0 & 0 & 0 & 1 & 0 \\ 0 & 0 & 1 & 0 & 0 \\ 0 & 1 & 0 & 0 & 0 \\ 1 & 0 & 0 & 0 & 0 \end{pmatrix}$$

- spectral behavior of associated linear setups

$$H_L \mathbf{u}_n = E_n \mathbf{u}_n, \qquad \det(H_L - EI) = 0$$

$$\text{(a)}: \qquad E_{1,2} = 0, \qquad E_{3,4} = \pm\sqrt{4k^2 - \gamma^2}$$

$$\text{(b)}: \qquad E_{1,2} = \pm i\gamma, \qquad E_{3,4} = \pm\sqrt{4k^2 - \gamma^2}$$

$$\text{(c)}: \qquad E_{1,2} = \sqrt{2k^2 - \gamma^2 \pm 2k\sqrt{k^2 - \gamma^2}}$$

$$E_{3,4} = -\sqrt{2k^2 - \gamma^2 \pm 2k\sqrt{k^2 - \gamma^2}}$$

$$\text{(d)}: \qquad E_{1,2} = \pm i\gamma, \qquad E_{3,4} = \pm\sqrt{4k^2 - \gamma^2}, \qquad E_5 = 0$$

- exact $\mathcal{P}\mathbf{T}-$symmetry

$$
\begin{aligned}
(\mathrm{a}): &\qquad \gamma^2 \leq 4k^2 \\
(\mathrm{b}): &\qquad \gamma = 0 \\
(\mathrm{c}): &\qquad \gamma^2 \leq k^2 \\
(\mathrm{d}): &\qquad \gamma = 0
\end{aligned}
$$

- broken $\mathcal{P}\mathbf{T}-$symmetry for (b) and (d)

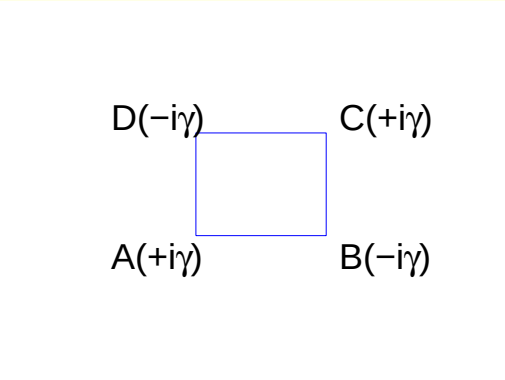

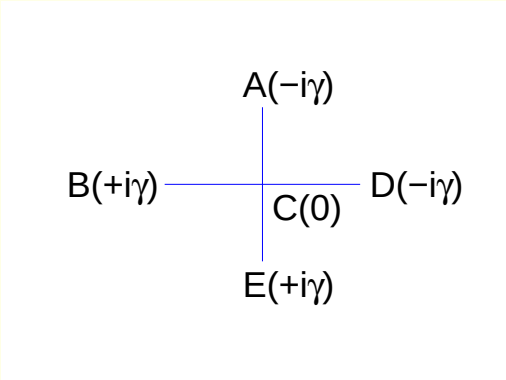

- $\exists$ sectors of exact $\mathcal{P}\mathbf{T}-$symmetry for (a) and (c)

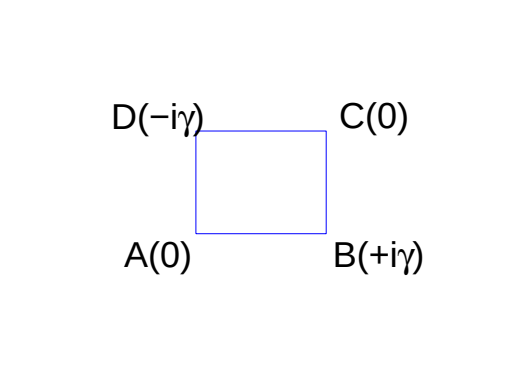

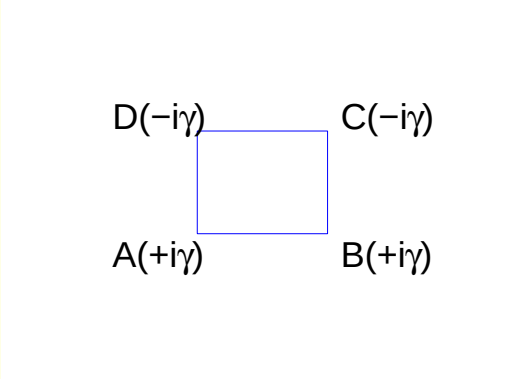

- special behavior of plaquette (a)

$$E_{1,2} = 0, \qquad E_{3,4} = \pm\sqrt{4k^2 - \gamma^2}$$

$$\mathrm{rank}\,(H_L) = 2, \qquad \ker(H_L) = \mathrm{span}_{\mathbb{C}}(\mathbf{u}_1, \mathbf{u}_2)$$

$$H_L(\gamma = \pm 2k) \qquad E_1 = \ldots = E_4 = 0$$

$$H_L(\gamma = \pm 2k) \quad \sim \quad \begin{pmatrix} 0 & 1 & 0 & 0 \\ 0 & 0 & 1 & 0 \\ 0 & 0 & 0 & 0 \\ 0 & 0 & 0 & 0 \end{pmatrix} = J_3(0) \oplus J_1(0)$$

- option for "simple" experiment on EP-3 behavior

Nonlinear setups

- search for stationary solutions

$$\mathbf{u}_0(t) = e^{-iEt}\mathbf{u}_0, \qquad E \in \mathbb{R}, \qquad \mathbf{u}_0 = (a, b, c, d)^T \in \mathbb{C}^4$$

- exact $\mathcal{P}\mathbf{T}-$symmetry possible for $\quad \mathcal{P}\mathcal{T}\mathbf{u}_0 = e^{i\varphi}\mathbf{u}_0, \quad \varphi \in \mathbb{R}$
- useful tool: inner products

$$\partial_t(\mathbf{u}^\dagger Y \mathbf{u}) = i\mathbf{u}^\dagger \left(H^\dagger Y - YH\right)\mathbf{u}$$

- more concrete

$$\begin{aligned} \partial_t|\mathbf{u}|^2 = \partial_t(\mathbf{u}^\dagger\mathbf{u}) &= -2i\mathbf{u}^\dagger H_{L,1}\mathbf{u} \\ \partial_t(\mathbf{u}^\dagger\mathcal{P}\mathbf{u}) &= i\mathbf{u}^\dagger\left[H_{NL}^\dagger(\mathbf{u})\mathcal{P} - \mathcal{P}H_{NL}(\mathbf{u})\right]\mathbf{u} \end{aligned}$$

- stability analysis of stationary solutions via perturbation theory

$$\mathbf{u}(t) = e^{-iEt}\left[\mathbf{u}_0 + \delta(e^{\lambda t}\mathbf{r} + e^{\bar{\lambda} t}\mathbf{s})\right] + O(\delta^2), \qquad |\delta| \ll 1$$

$$\begin{aligned}
(\mathbf{B} - i\lambda I_8)\mathbf{x} &= 0 \\
\mathbf{B} &:= \left.\begin{pmatrix} \partial_{u_n} F(\mathbf{u}, \bar{\mathbf{u}}) & \partial_{\bar{u}_n} F(\mathbf{u}, \bar{\mathbf{u}}) \\ -\partial_{u_n} \bar{F}(\mathbf{u}, \bar{\mathbf{u}}) & -\partial_{\bar{u}_n} \bar{F}(\mathbf{u}, \bar{\mathbf{u}}) \end{pmatrix}\right|_{\mathbf{u}=\mathbf{u}_0}, \qquad n = 1, 2, 3, 4 \\
\mathbf{x} &= (\mathbf{r}, \bar{\mathbf{s}})^T
\end{aligned}$$

stable: $\lambda \in i\mathbb{R}$
unstable: $\lambda \notin i\mathbb{R}$

- concrete analysis done numerically

- concrete analysis of stationary solutions: e.g. plaquette (a)

$$
\begin{aligned}
Ea &= k(b+d) + |a|^2 a, \\
Eb &= k(a+c) + |b|^2 b - i\gamma b, \\
Ec &= k(b+d) + |c|^2 c, \\
Ed &= k(a+c) + |d|^2 d + i\gamma d,
\end{aligned}
$$

$$
\begin{aligned}
\partial_t |\mathbf{u}|^2 &= -2i\mathbf{u}^\dagger H_{L,1}\mathbf{u}, \\
0 &= 2\gamma(|b|^2 - |d|^2)
\end{aligned}
$$

$$
\begin{aligned}
\partial_t(\mathbf{u}^\dagger \mathcal{P}\mathbf{u}) &= i\mathbf{u}^\dagger \left[H_{NL}^\dagger(\mathbf{u})\mathcal{P} - \mathcal{P}H_{NL}(\mathbf{u})\right]\mathbf{u}, \\
0 &= \left(|a|^2 - |c|^2\right)(\bar{a}c - \bar{c}a) + \left(|b|^2 - |d|^2\right)(\bar{b}d - \bar{d}b)
\end{aligned}
$$

- ansatz $\quad a = Ae^{i\phi_a}, b = Be^{i\phi_b}, c = Ce^{i\phi_c}, d = De^{i\phi_d}$

- results in (with $\phi_a = 0$)

case 1a: $$\sin(\phi_b) = -\frac{\gamma B}{2kA}, \qquad \phi_c = 0, \qquad \phi_d = -\phi_b,$$

case 1aa: $$A = B = C = D = \sqrt{E \mp \sqrt{4k^2 - \gamma^2}},$$

case 1ab: $$A = C,\ B = D = \frac{2kA}{\sqrt{A^4 + \gamma^2}}, \quad E = A^2 + B^2,$$

case 1b: $$\phi_d = -\phi_b = \mp\pi/2, \quad \phi_c = 0, \pi, \qquad \gamma = \pm 2k, \quad \gamma = 0,$$
$$A = B = C = D = \sqrt{E},$$

case 2: $$\sin(\phi_b) = -\frac{\gamma}{2k}, \qquad \phi_d = \phi_b - \pi, \qquad \phi_c = 2\phi_b \pm \pi,$$
$$A = B = C = D = \sqrt{E}$$

- $\mathcal{P}\mathbf{T}-$symmetry $\qquad \mathcal{PT}\mathbf{u}_0 = \mathbf{u}_0$

- case 2:

$$
\begin{aligned}
\mathbf{u}_0 &= e^{i(\phi_b - \pi/2)}\mathbf{v}_0, \\
\mathbf{v}_0 := & \quad A\left[e^{-i(\phi_b-\pi/2)}, e^{i\pi/2}, e^{i(\phi_b-\pi/2)}, e^{-i\pi/2}\right]^T, \\
\mathcal{PT}\mathbf{v}_0 &= \mathbf{v}_0
\end{aligned}
$$

Outlook

- more general nonlinear terms and their symmetries
- general symmetries of multi-sesquilinear objects
- generalization toward nonlinear $\sigma-$models $+$ WZW ?

III. Tachistochrones in $\mathcal{PT}-$symmetric LRC circuits

- Phys. Rev. A 85, (2012), 062122; arXiv:1205.1847
- coupled oscillators with balanced gain-loss:

$$\begin{aligned}\frac{d^2Q_1}{d\tau^2} - \gamma\frac{dQ_1}{d\tau} + \alpha Q_1 - \mu\alpha Q_2 &= 0\\ \frac{d^2Q_2}{d\tau^2} + \gamma\frac{dQ_2}{d\tau} + \alpha Q_2 - \mu\alpha Q_1 &= 0\end{aligned}$$

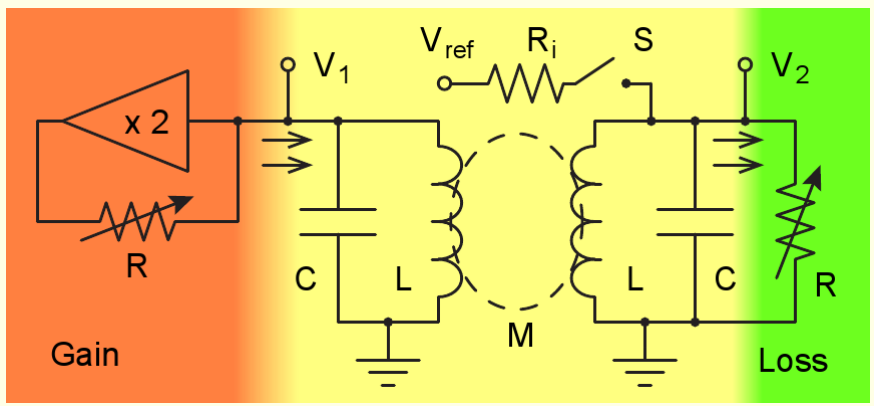

- $\mathcal{PT}-$symmetry: $\quad Q_1 \rightleftarrows Q_2, \qquad \tau \to -\tau$

- 1st-order system: $\Psi \equiv (Q_1, Q_2, \dot{Q}_1, \dot{Q}_2)^T$

$$\frac{d\Psi}{d\tau} = \mathcal{L}\Psi, \qquad \mathcal{L} = \begin{pmatrix} 0 & 0 & 1 & 0 \\ 0 & 0 & 0 & 1 \\ -\alpha & \mu\alpha & \gamma & 0 \\ \mu\alpha & -\alpha & 0 & -\gamma \end{pmatrix}$$

- Schrödinger type equation

$$i\partial_\tau \Psi = H_{eff}\Psi, \qquad H_{eff} \equiv i\mathcal{L}$$

- $\mathcal{P}_0\mathcal{T}_0-$symmetry: $[\mathcal{P}_0\mathcal{T}_0, H_{eff}] = 0$

$$\mathcal{P}_0 = \begin{pmatrix} \sigma_x & 0 \\ 0 & \sigma_x \end{pmatrix}, \qquad \mathcal{T}_0 = \begin{pmatrix} I & 0 \\ 0 & -I \end{pmatrix} \mathcal{K}$$

- eigenvalue problem

$$(H_{eff} - \omega_k)\Xi_k = 0, \qquad k = 1, 2, 3, 4$$

- characteristic polynomial

$$\omega_k^4 - (2\alpha - \gamma^2)\omega_k^2 + \alpha = 0$$

- eigenfrequencies

$$\begin{aligned}
\omega_{1,4} &= \pm\sqrt{\Omega_+}, \qquad \omega_{2,3} = \pm\sqrt{\Omega_-} \\
\Omega_\pm &:= \alpha - \frac{\gamma^2}{2} \pm \sqrt{\left(\alpha - \frac{\gamma^2}{2}\right)^2 - \alpha} \\
\alpha &= 1/(1-\mu^2) \geq 1, \qquad \mu^2 \in [0, 1]
\end{aligned}$$

- EP-pair at $\gamma_c^2 = 2(\alpha - \alpha^{1/2})$
- $\Omega_\pm \in \mathbb{R}_+$, $\gamma^2 \leq \gamma_c^2$
- eigenvectors:

$$\begin{aligned} \Xi_k &= a_k(e^{-i\phi_k}, e^{i\phi_k}, -i\omega_k e^{-i\phi_k}, -i\omega_k e^{i\phi_k})^T \\ e^{2i\phi_k} &:= \frac{\alpha - \omega_k^2 + i\gamma\omega_k}{\alpha\mu}, \quad a_k \in \mathbb{R} \end{aligned}$$

- exact $\mathcal{P}_0\mathcal{T}_0-$symmetry for $\gamma^2 \leq \gamma_c^2$

$$\omega_k \in \mathbb{R}, \qquad \phi_k \in \mathbb{R}, \qquad \mathcal{P}_0\mathcal{T}_0\Xi_k = \Xi_k$$

- spontaneously broken $\mathcal{P}_0\mathcal{T}_0-$symmetry for $\gamma^2 > \gamma_c^2$:

$$\omega_k \notin \mathbb{R}, \qquad \phi_k \notin \mathbb{R}, \qquad \mathcal{P}_0\mathcal{T}_0\Xi_k \not\propto \Xi_k$$

- More standard form of $\mathcal{PT}-$symmetry?

- we require:

$$
\begin{aligned}
H &= H^T = RH_{eff}R^{-1} \\
[\mathcal{PT}, H] &= 0 \\
\mathcal{P} &= \begin{pmatrix} 0 & 0 & 0 & 1 \\ 0 & 0 & 1 & 0 \\ 0 & 1 & 0 & 0 \\ 1 & 0 & 0 & 0 \end{pmatrix} = R\mathcal{P}_0R^{-1} \\
\mathcal{T} &= \mathcal{K} = R\mathcal{T}_0R^{-1} \\
H(\gamma = 0) &= H^\dagger(\gamma = 0)
\end{aligned}
$$

- simple computer algebra gives

$$
\begin{aligned}
H &= \begin{pmatrix} 0 & b+i\gamma/2 & c+i\gamma/2 & 0 \\ b+i\gamma/2 & 0 & 0 & c-i\gamma/2 \\ c+i\gamma/2 & 0 & 0 & b-i\gamma/2 \\ 0 & c-i\gamma 2 & b-i\gamma/2 & 0 \end{pmatrix} \\
b &= \sqrt{(\alpha+\alpha^{1/2})/2} \qquad c = -\sqrt{(\alpha-\alpha^{1/2})/2}
\end{aligned}
$$

- via more sophisticated algebra

$$
R = \begin{pmatrix} b+c & b+c & i & -i \\ b-c & -(b-c) & i & i \\ -(b-c) & b-c & i & i \\ b+c & b+c & -i & i \end{pmatrix}
$$

- exact $\mathcal{PT}-$symmetry $\gamma^2 \leq \gamma_c^2$, characteristic evolution:

$$\Psi(\tau = 0) = \begin{pmatrix} 0 \\ 0 \\ 1 \\ 0 \end{pmatrix} \quad \longrightarrow \quad \Psi(\tau = \tau_{\rm fpt}) = \begin{pmatrix} \psi_1 \\ \psi_2 \\ 0 \\ \psi_4 \end{pmatrix}$$

$$\langle \Psi(0) | \Psi(\tau_{\rm fpt}) \rangle \quad = \quad 0$$

- general solution

$$\begin{aligned} \Psi(\tau) \quad &= \quad \sum_{k=1}^{4} e^{-i\omega_k \tau} A_k \Xi_k, \qquad A_k \in \mathbb{C} \\ & \qquad \omega_1 = -\omega_4, \quad \omega_2 = -\omega_3, \qquad \omega_k \in \mathbb{R} \\ \Psi(\tau) \quad &\in \quad \mathbb{R}^4 \qquad \Longrightarrow \qquad A_1 \Xi_1 = \bar{A}_4 \bar{\Xi}_4, \quad A_2 \Xi_2 = \bar{A}_3 \bar{\Xi}_3 \end{aligned}$$

- solution with initial condition on the gain side $\Psi(\tau = 0) = (0, 0, 1, 0)^T$

$$\Psi(\tau) = \frac{\alpha\mu}{\Delta} \begin{pmatrix} -\frac{\sin(\omega_1\tau+\delta_1)}{\omega_1} + \frac{\sin(\omega_2\tau+\delta_2)}{\omega_2} \\ -\frac{\sin(\omega_1\tau)}{\omega_1} + \frac{\sin(\omega_2\tau)}{\omega_2} \\ -\cos(\omega_1\tau + \delta_1) + \cos(\omega_2\tau + \delta_2) \\ -\cos(\omega_1\tau) + \cos(\omega_2\tau) \end{pmatrix}$$

$$\Delta := \omega_1^2 - \omega_2^2\,, \qquad \frac{\alpha\mu}{\Delta} = \frac{1}{2}\sqrt{1 + \frac{\gamma^2}{\delta\omega^2}}\sqrt{1 + \frac{\gamma^2}{\bar{\omega}^2}}$$

$$\delta\omega := \omega_1 - \omega_2, \qquad \bar{\omega} := \omega_1 + \omega_2$$

$$\sin(\delta_1) = \frac{\gamma\omega_1}{\alpha\mu}\,, \qquad \cos(\delta_1) = -\frac{\Delta - \gamma^2}{2\alpha\mu}$$

$$\sin(\delta_2) = \frac{\gamma\omega_2}{\alpha\mu}\,, \qquad \cos(\delta_2) = \frac{\Delta + \gamma^2}{2\alpha\mu}$$

$$\Psi(\tau=0) = \begin{pmatrix} 0 \\ 0 \\ 1 \\ 0 \end{pmatrix} \quad \longrightarrow \quad \Psi(\tau=\tau_{\rm fpt}) = \begin{pmatrix} \psi_1 \\ \psi_2 \\ 0 \\ \psi_4 \end{pmatrix}$$

$$\langle \Psi(0) | \Psi(\tau_{\rm fpt}) \rangle \quad = \quad 0$$

- essential component:

$$\psi_3(\tau) = \sqrt{1+\frac{\gamma^2}{\delta\omega^2}}\sqrt{1+\frac{\gamma^2}{\bar{\omega}^2}}\,\sin\left[\frac{\delta\omega\tau+\delta_1-\delta_2}{2}\right]\sin\left[\frac{\bar{\omega}\tau+\delta_1+\delta_2}{2}\right]$$

- first zero of the slowly evolving enveloping amplitude

$$\tau_{\rm fpt} = (\delta_2-\delta_1)/\delta\omega$$

invariance of the equation system under simultaneous action of
$Q_1 \rightleftarrows Q_2, \qquad \gamma \to -\gamma$

$$\Psi(\tau = 0) = \begin{pmatrix} 0 \\ 0 \\ 0 \\ 1 \end{pmatrix} \quad \longrightarrow \quad \Psi(\tau = \tau_{\mathrm{fpt}}) = \begin{pmatrix} \psi_1 \\ \psi_2 \\ \psi_3 \\ 0 \end{pmatrix}$$

$$\langle \Psi(0) | \Psi(\tau_{\mathrm{fpt}}) \rangle \quad = \quad 0$$

follows from $\gamma \to -\gamma$

- first passage time $\tau_{\rm fpt} = \frac{1}{\delta\omega}\left[\pi \pm \arccos\left(\frac{\delta\omega^2-\gamma^2}{\delta\omega^2+\gamma^2}\right)\right]$

- no gain-loss: $\gamma = 0$: $\tau_{\rm fpt} = \frac{\pi}{\delta\omega}$
  standard Hermitian time-energy uncertainty relation
  (Aharonov-Anandan lower bound)

- large gain-loss

$$\gamma \gg \delta\omega \qquad \longrightarrow \quad \tau_{\rm fpt} \approx \frac{2\pi}{\delta\omega}$$

$$\tau_{\rm fpt} \approx \frac{2}{\gamma}$$

- tachistochrone solution: $\tau_{\rm fpt} < \frac{\pi}{\delta\omega}$
  (slower than $\mathcal{PT}$ brachistochrone)

Thank you for your attention